RHEL6_IC617 - VMware Workstation

File Edit View VM Tabs Help

Library

Type here to sea...

My Computer

RHEL6_IC617

Home | RHEL6_IC617

Computer

work's Home

Trash

Terminal

work@work-eda:~

File Edit View Search Terminal Help

```
[work@work-eda ~]$ Virtuoso
bash: Virtuoso: command not found
[work@work-eda ~]$ virtuoso


**********************  CADENCE SOFTWARE INFORMATION  ************************
@(#)$CDS: spectre  version 15.1.0 64bit 11/12/2015 19:02 (sjfnl729) $
@(#)$CDS: virtuoso version 6.1.7-64b 11/09/2015 12:45 (sjfnl165) $

          ****************************************************
          *    Inital is OK, NOW starting IC617 .....      *
          ****************************************************


[work@work-eda ~]$ \e Display :0.0 Error "BadAtom (invalid Atom parameter)"
\e  request 20 error 5 serial 229
```

Virtuoso® 6.1.7-64b - Log: /home/work/CDS.log

File Tools Options Help cādence

```
HSPICE-ADE: use interface at '/opt/synopsys/Hspice-2015.06-3/interface'
HSPICE-ADE: use HSPICE at '/opt/synopsys/Hspice-2015.06-3/hspice/bin/hspice'
HSPICE-ADE: HSPICE Version K-2015.06-3 linux64 (build id: 3630644)
```

S

mouse L: M: R:

1 >

work@work-eda:~

virtuoso

RHEL6_IC617 - VMware Workstation

File Edit View VM Tabs Help

Library

Type here to sea...

My Computer

RHEL6_IC617

Home | RHEL6_IC617

Virtuoso® 6.1.7-64b - Log: /home/work/CDS.log

File Tools Options Help

cādence

```
COPYRIGHT © 1992-2015  CADENCE DESIGN SYSTEMS INC.  ALL RIGHTS RESERVED.
          © 1992-2015  UNIX SYSTEMS Laboratories INC.,
                         Reproduced with permission.

This Cadence Design Systems program and online documentation are
proprietary/confidential information and may be disclosed/used only
as authorized in a license agreement controlling such use and disclosure.

          RESTRICTED RIGHTS NOTICE (SHORT FORM)
Use/reproduction/disclosure is subject to restriction
set forth at FAR 1252.227-19 or its equivalent.
Program:    @(#)$CDS: virtuoso version 6.1.7-64b 11/09/2015 12:45 (sjfnl165) $
Sub version:    sub-version  IC6.1.7-64b.78  (64-bit addresses)
Loading geView.cxt
Loading menuBuilder.cxt
Loading schView.cxt
Loading selectSv.cxt
Loading wireEdit.cxt
Loading pte2.cxt
Loading xlUI.cxt
Loading auCore.cxt
Loading vhdl.cxt
Loading seismic.cxt
Loading ci.cxt
Loading ams.cxt
Virtuoso Framework License (111) was checked out successfully. Total checkout time was 0.00s.
END OF SITE CUSTOMIZATION
//
//  Calibre Skill Interface * (v2015.2_36.27) *
//
//                Copyright Mentor Graphics Corporation 2005
//                            All Rights Reserved
```

mouse L: M: R:

1 >

work@work-eda:~ | [Cadence Library Mana...

virtuoso

The installed version of VMware Tools is not up to date. Log in to the guest operating system and click "Update Tools."

Update Tools | Remind Me Later | Never Remind Me

ome: Start...

Create

sign: Cadenc...

ete Cadence Tools
Analog & Digital VLSI |...
sign

e Virtuoso Tutorial:
Inverter Design &...
sign

e Virtuoso Tutorial:
Inverter Design: Symb...
sign

e Virtuoso Tutorial:
Inverter - DC & Transie...
sign

e Virtuoso Tutorial :
ing a Common Drain...
sign

e Virtuoso: Common
mplifier Simulation: A...
sign

e Virtuoso: Common

From VLSI Design

Home | RHEL6_IC617

Computer
work's Home
Trash
Terminal

Attach Library to Technology Library

New Library: Vansh_lib

Technology Library:
US_8ths
analogLib
basic
cdsDefTechLib
gpdk045
gpdk090

OK | Cancel | Apply | Help

Templates
/home/work
Compression enabled

OK | Cancel | Defaults | Apply | Help

```
\e  request 20 error 5 serial 229
```

Virtuoso® 6.1.7-64b - Log: /home/work/CDS.log

File Tools Options Help — cadence

```
  HSPICE-ADE: use HSPICE at '/opt/synopsys/Hspice-2015.06-3/hspice/bin/hspice'
  HSPICE-ADE: HSPICE Version K-2015.06-3 linux64 (build id: 3630644)
Created library "Vansh_lib" as "/home/work/Vansh_lib"
```

mouse L: M: R:

work@work-eda:~ | [Cadence Library Mana... | Attach Library to Techn...
virtuoso | New Library

The installed version of VMware Tools is not up to date. Log in to the guest operating system and click "Update Tools." — Update Tools | Remind Me Later | Never Remind Me

ve the mouse pointer inside or press Ctrl+G.

ome: Start... | All Bookmarks

ISH I GPDK TEHCNLOGY FILE AND
ICH SHOUL DI CHOOSE EHICH IS
TER

e questions and possible options to help ...

GPDK is a *generic* PDK for practice (like
90, gpdk45). The "best" one depends

do cadence virtuouse

rch modes and shortcuts

ENG IN | 00:37 25-04-2026

Virtuoso® 6.1.7-64b - Log: /home/work/CDS.log
File Tools Options Help
cadence
Loaded gpdk090/libInit.il successfully!
INFO (TECH-180011): Design library 'Vansh_lib' successfully attached to technology library 'gpdk090'.
mouse L:
M:
R:
1
>

RHEL6_IC617 - VMware Workstation

File Edit View VM Tabs Help

Library

Type here to sea...

My Computer

RHEL6_IC617

Home

RHEL6_IC617

Computer

work's Home

Trash

Terminal

Virtuoso® Schematic Editor L Editing: Vansh_lib inv_sch schematic

Launch File Edit View Create Check Options Window Calibre Help

cādence

Basic

Search

Navigator

Nets

inv_sch

Search

Name

inv_sch

Property Editor

mouse L: schSingleSelectPt() M: deNew() R: schHiMousePopUp()

1(2) Cmd: Sel: 0

work@work-eda:~ [Cadence Library Mana...

virtuoso inv_sch

The installed version of VMware Tools is not up to date. Log in to the guest operating system and click "Update Tools."

Update Tools Remind Me Later Never Remind Me

To direct input to this VM, move the mouse pointer inside or press Ctrl+G.

RHEL6_IC617 - VMware Workstation

File Edit View VM Tabs Help

Library

Type here to sea...

My Computer

RHEL6_IC617

Home | RHEL6_IC617

Computer

work's Home

Trash

Terminal

Virtuoso® Schematic Editor L Editing: Vansh_lib inverter schematic

Launch File Edit View Create Check Options Window Calibre Help

cādence

Basic

Navigator

Nets

inverter

Search

Name

inverter

Property Editor

Add Instance

Library S

Browse

Cell

US_8ths

Vansh_lib

View

basic

rfExamples

Names

Add Wire Stubs at:

all terminals

registered terminals only

...

Array Rows 1 Columns 1

Rotate Sideways Upside Down

Hide Cancel Defaults Help

mouse L: mouseAddPt(t)

M: Rotate 90

R: schHiMousePopUp()

1(2) Use either the browser or options form to define the instance to be added.

Cmd: Instance Sel: 0

work@work-eda:~

virtuoso

inverter

Add Instance

RHEL6_IC617 - VMware Workstation

File Edit View VM Tabs Help

Library

Type here to sea...

My Computer

RHEL6_IC617

Home | RHEL6_IC617

Computer

work's Home

Trash

Terminal

Virtuoso® Schematic Editor L Ed

Launch File Edit View Create Check Options Window Calibre Hel

Basic

Navigator

Nets

inverter

Search

Name

inverter

Property Editor

mouse L: mouseAddPt(t)

1(2) Point at location for the instance.

Add Instance

Library gpdk090 Browse

Cell nmos1v

View symbol

Names

Add Wire Stubs at:

all terminals registered terminals only ...

Array Rows 1 Columns 1

Rotate Sideways Upside Down

Model Name gpdk090_nmos1v

Multiplier 1

Length 100n M

Total Width 120n M

Finger Width 120n M

Fingers 1

Threshold 120n M

Apply Threshold

Gate Connection None

Use DRM Rules Minimum

S/D Metal Width 120n M

Switch S/D

Bodytie Type None

Edit Area & Perim

Drain diffusion area 69.6f

Hide Cancel Defaults Help

work@work-eda:~ | inverter

virtuoso | Add Instance

The installed version of VMware Tools is not up to date. Log in to the guest operating system and click "Update Tools."

Update Tools Remind Me Later Never Remind Me

RHEL6_IC617 - VMware Workstation

File Edit View VM Tabs Help

Library

Type here to sea...

My Computer

RHEL6_IC617

Home | RHEL6_IC617

Computer

work's Home

Trash

Terminal

Virtuoso® Schematic Editor L Ed

Launch File Edit View Create Check Options Window Calibre Hel

Basic

Navigator

Nets

inverter

Search

Name

inverter

Property Editor

mouse L: mouseAddPt(t)

1(2) Point at location for the instance.

Add Instance

Library gpdk090 Browse

Cell nmos1v

View symbol

Names

Add Wire Stubs at:

all terminals registered terminals only ...

Array Rows 1 Columns 1

Rotate Sideways Upside Down

Model Name gpdk090_nmos1v

Multiplier 1

Length 100n M

Total Width 120n M

Finger Width 120n M

Fingers 1

Threshold 120n M

Apply Threshold

Gate Connection None

Use DFM Rules Minimum

S/D Metal Width 120n M

Switch S/D

Bodytie Type None

Edit Area & Perim

Drain diffusion area 69.6f

Hide Cancel Defaults Help

work@work-eda:~ | inverter

virtuoso | Add Instance

The installed version of VMware Tools is not up to date. Log in to the guest operating system and click "Update Tools."

Update Tools Remind Me Later Never Remind Me

File Edit View VM Tabs Help

Library

Type here to sea...

My Computer

RHEL6_IC617

Home | RHEL6_IC617

Computer

work's Home

Trash

Terminal

Virtuoso® Schematic Editor L Editing: Vansh_lib inverter schematic *

Launch File Edit View Create Check Options Window Calibre Help

cadence

Basic

Search

Navigator

Nets

inverter

Search

Name

inverter

Property Editor

instance All

Model Name	gpdk090_r
Multiplier	1
Length	100n M
Total Width	120n M
Finger Width	120n M
Fingers	1
Threshold	120n M

nmos1v NM0

"gpdk090_nmos1v"

w:120n

l:100n

m:1

mouse L: schSingleSelectPt() M: schHiCreateInst() R: schHiMousePopUp()

1(2) Cmd: Sel: 1

work@work-eda:~ | inverter *

virtuoso

The installed version of VMware Tools is not up to date. Log in to the guest operating system and click "Update Tools."

Update Tools | Remind Me Later | Never Remind Me

To direct input to this VM, move the mouse pointer inside or press Ctrl+G.

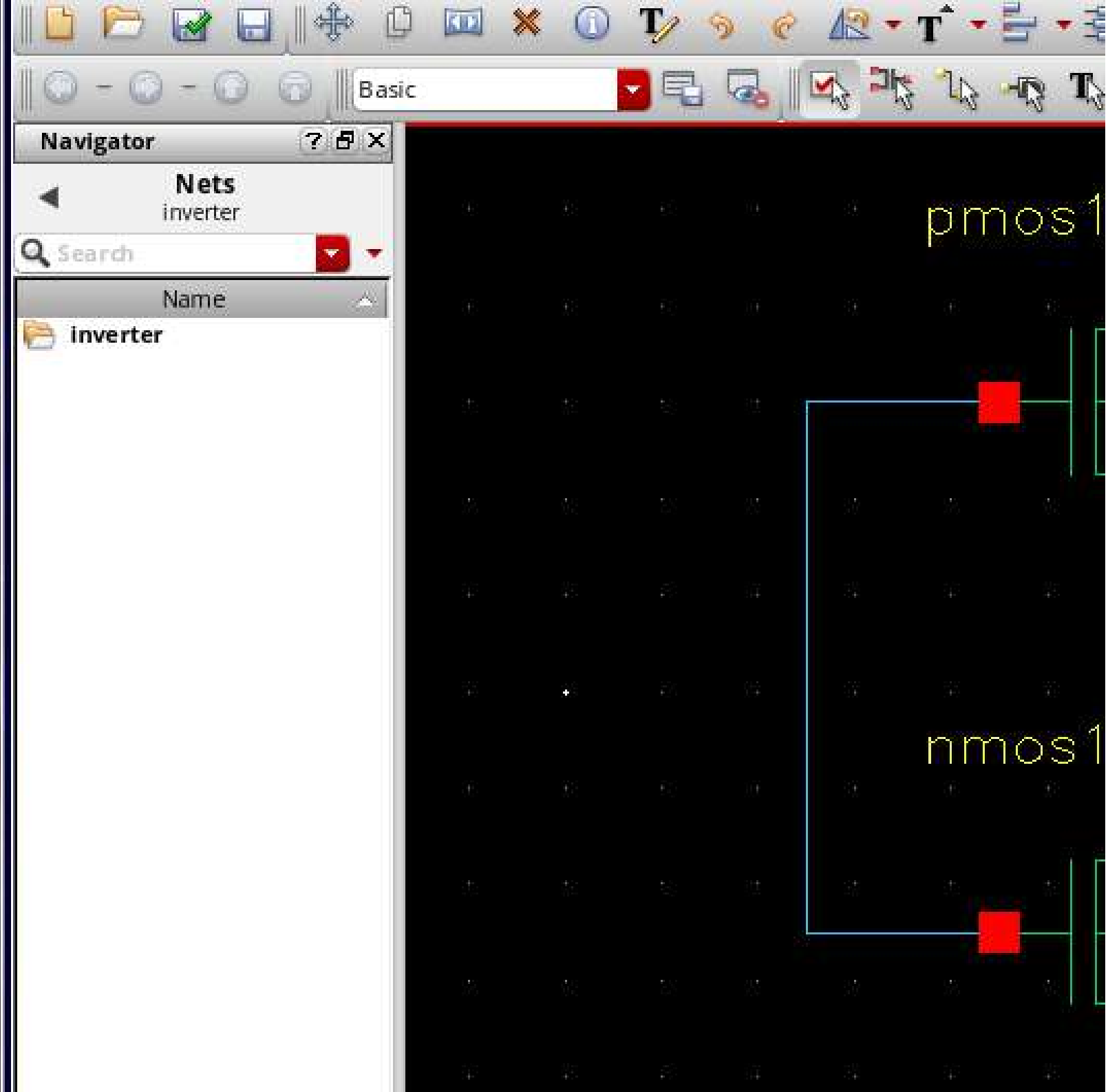
Basic
Navigator
Nets
inverter
Search
Name
inverter
pmos1
nmos1

RHEL6_IC617 - VMware Workstation

File Edit View VM Tabs Help

Library

Type here to sea...

My Computer

RHEL6_IC617

Home

RHEL6_IC617

Virtuoso® Schematic Editor L Editing: Vansh_lib in1 schematic *

Launch File Edit View Create Check Options Window Calibre Help

cādence

Basic

Search

Navigator

Nets

in1

Search

Name

in1

vin

vout

Property Editor

pmos1v

PM0

"gpdk090_pmos1v"

w:120n

l:100n

m:1

vin

vout

nmos1v

NM0

"gpdk090_nmos1v"

w:120n

l:100n

m:1

mouse L: mouseAddPt(t)

M: Rotate 90

R: schHiMousePopUp()

1(2) Use the options form to supply terminal names for the pins.

Cmd: Pin Sel: 0

work@work-eda:~

in1 *

virtuoso

Virtuoso® Schematic Editor L Editing: Vansh_lib in1 schematic *

Launch File Edit View Create Check Options Window Calibre Help

cadence

Basic

Search

Navigator

Nets
in1

Search

Name

in1
vin
vout

Property Editor

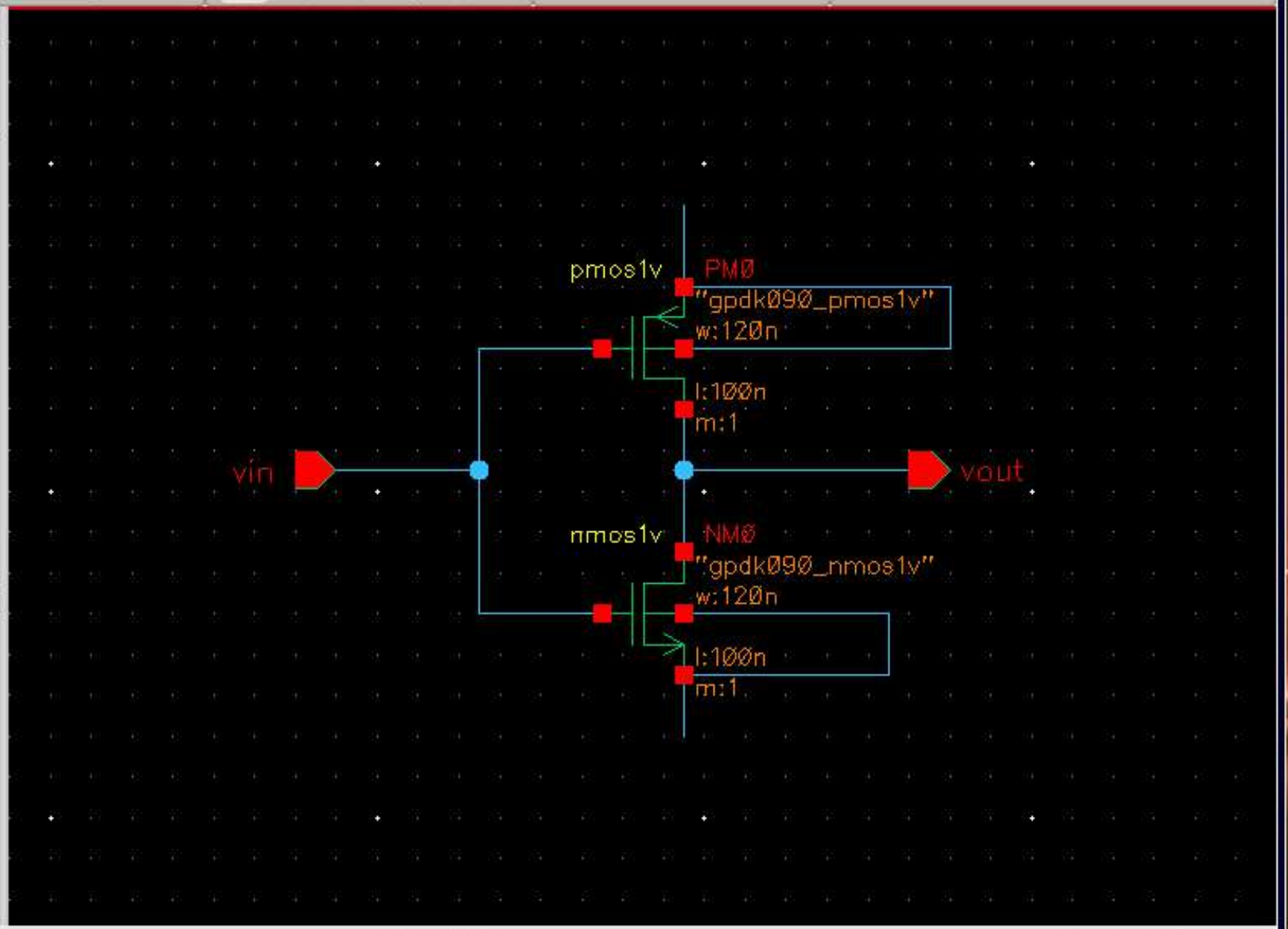

mouse L: mouseAddPt(t) M: Rotate 90 R: schHiMousePopUp()

1(2) Use the options form to supply terminal names for the pins. Cmd: Pin Sel: 0

work@work-eda:~ in1 *

virtuoso

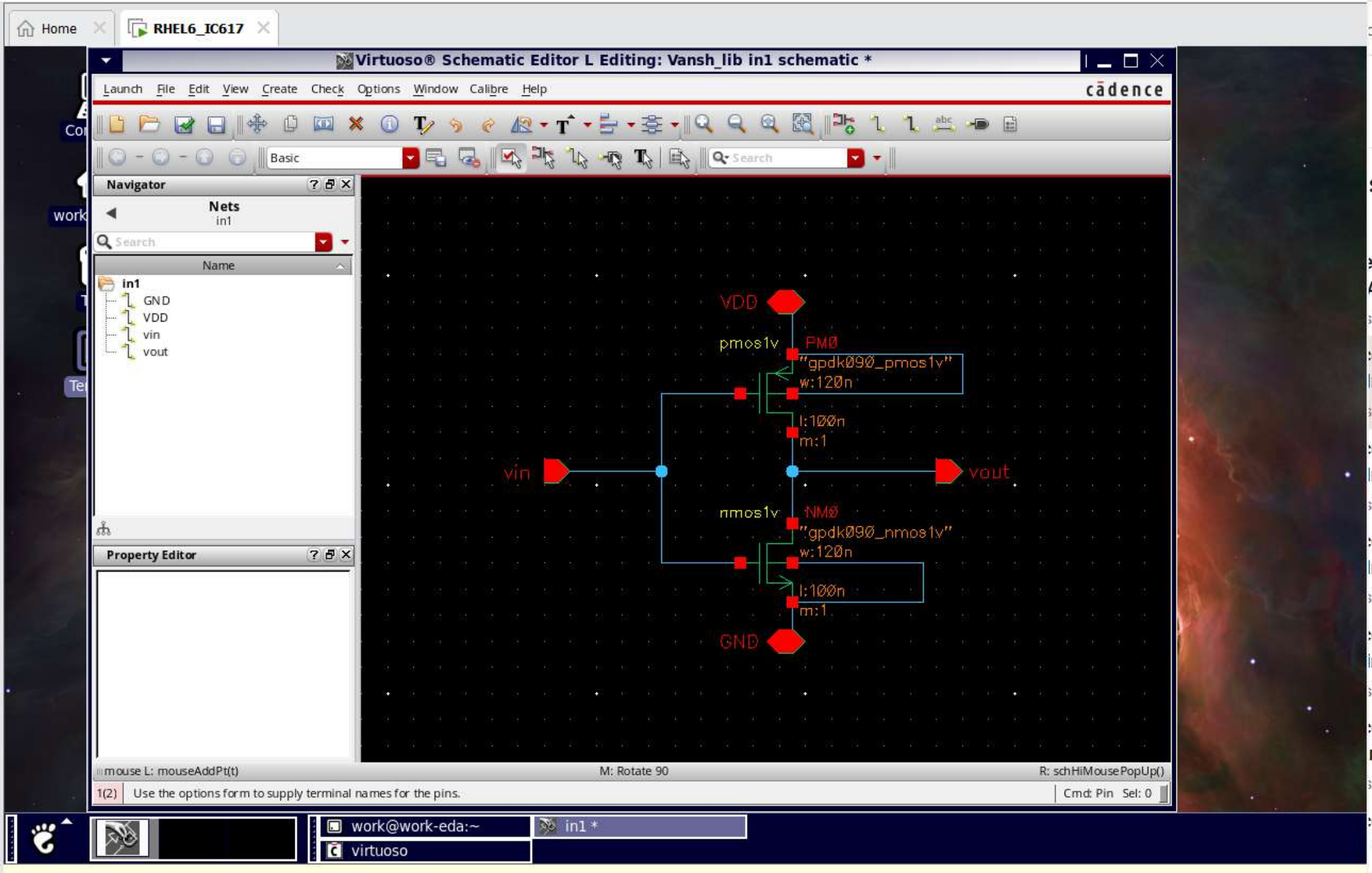
Home
RHEL6_IC617
Virtuoso® Schematic Editor L Editing: Vansh_lib in1 schematic *
Launch File Edit View Create Check Options Window Calibre Help
cādence
Basic
Search
Navigator
Nets
in1
Name
in1
GND
VDD
vin
vout
Property Editor
VDD
pmos1v
PM0
"gpdk090_pmos1v"
w:120n
l:100n
m:1
vin
vout
nmos1v
NM0
"gpdk090_nmos1v"
w:120n
l:100n
m:1
GND
mouse L: mouseAddPt(t)
M: Rotate 90
R: schHiMousePopUp()
1(2) Use the options form to supply terminal names for the pins.
Cmd: Pin Sel: 0
work@work-eda:~
in1 *
virtuoso

RHEL6_IC617 - VMware Workstation

File Edit View VM Tabs Help

Library

Type here to sea...

My Computer

RHEL6_IC617

Home | RHEL6_IC617

Computer

work's Home

Trash

Terminal

Virtuoso® Schematic Editor L Editing: Vansh_lib in1 schematic

Launch File Edit View Create Check Options Window Calibre Help

cādence

Basic

Search

Navigator

All

in1

Search

Name

in1

NM0 (nmos1v)

PM0 (pmos1v)

GND

VDD

vin

vout

GND:P__3

VDD:P__2

vin:P__0

vout:P__1

Property Editor

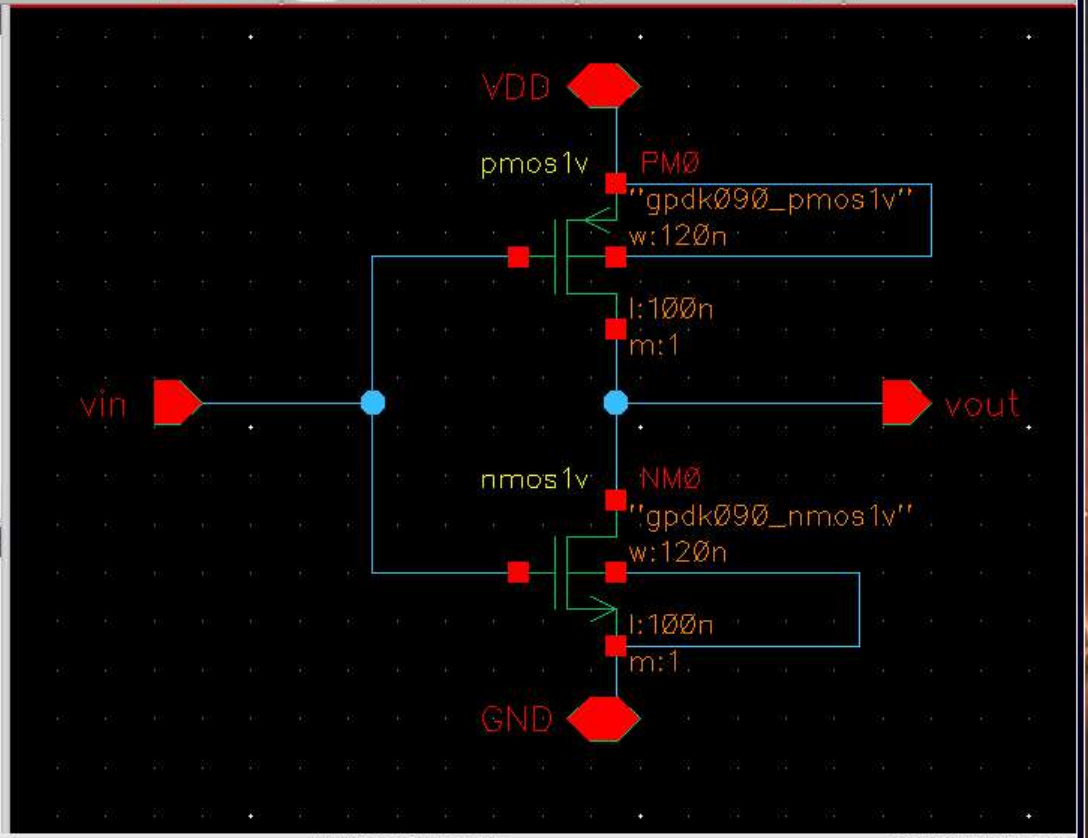

mouse L: schSingleSelectPt() M: ddsOpenLibManager() R: schHiMousePopUp()

6(7) Cmd: Sel: 0

work@work-eda:~ | [Cadence Library Man... | inverter | Virtuoso® Schematic Editor L Editing: Vansh_lib in1 schematic

RHEL6_IC617 - VMware Workstation

File Edit View VM Tabs Help

Library

Type here to sea...

My Computer

RHEL6_IC617

Home | RHEL6_IC617

Computer

work's Home

Trash

Terminal

Virtuoso® Schematic Editor L Editing: Vansh_lib in1 schematic

Launch File Edit View Create Check Options Window Calibre Help

cādence

Basic

Navigator

All

in1

Search

Name

in1

NM0 (nmos1v)

PM0 (pmos1v)

GND

VDD

vin

vout

GND:P__3

VDD:P__2

vin:P__0

vout:P__1

Property Editor

Cellview From Cellview

Library Name: Vansh_lib

Browse

Cell Name: in1

From View Name: schematic

To View Name: symbol

Tool / Data Type: schematicSymbol

Display Cellview

Edit Options

OK Cancel Defaults Apply Help

vout

nmos1v

NM0

"gpdk090_nmos1v"

w:120n

l:100n

m:1

GND

mouse L: schSingleSelectPt() M: schHiViewToView() R: schHiMousePopUp()

6(7) >

Cmd: Sel: 0

work@work-eda:~ | [Cadence Library Man... | inverter | inverter | Cellview From Cellview

virtuoso | in1 | in1 | in1 | Cellview From Cellview

The installed version of VMware Tools is not up to date. Log in to the guest operating system and click "Update Tools."

Update Tools Remind Me Later Never Remind Me

To direct input to this VM, move the mouse pointer inside or press Ctrl+G.

RHEL6_IC617 - VMware Workstation

File Edit View VM Tabs Help

Library

Type here to sea...

My Computer

RHEL6_IC617

Home | RHEL6_IC617

Computer

work's Home

Trash

Terminal

Virtuoso® Schematic Editor L Editing: Vansh_lib in1 schematic

Launch File Edit View Create Check Options Window Calibre Help

cādence

Basic

Navigator

All

in1

Search

Name

in1

NM0 (nmos1v)

PM0 (pmos1v)

GND

VDD

vin

vout

GND:P__3

VDD:P__2

vin:P__0

vout:P__1

Property Editor

wire segr

Attributes

Signal Type	ground
Min Voltage	0
Max Voltage	0
Width Type	narrow
Points	(-0.0625, -(
Color	cadetB
Style	solid

VDD

pmos1v

PM0

vout

GND

Cellview From Cellview

Library Name: Vansh_lib

Browse

Cell Name: in1

From View Name: schematic

To View Name: symbol

Tool / Data Type: schematicSymbol

Display Cellview

Edit Options

OK Cancel Defaults Apply Help

mouse L: schSingleSelectPt() M: schHiViewToView() R: schHiMousePopUp()

6(7) > Cmd: Sel: 1

work@work-eda:~ | [Cadence Library Man... | inverter | inverter | Cellview From Cellview

virtuoso | in1 | in1 | in1 | Cellview From Cellview

The installed version of VMware Tools is not up to date. Log in to the guest operating system and click "Update Tools."

Update Tools Remind Me Later Never Remind Me

RHEL6_IC617 - VMware Workstation

File Edit View VM Tabs Help

Library

Type here to sea...

My Computer

RHEL6_IC617

Home | RHEL6_IC617

Computer

work's Home

Trash

Terminal

Virtuoso® Symbol Editor L Editing: Vansh_lib in1 symbol *

Launch File Edit View Create Check Options Window Help

cādence

Basic

Navigator

All

in1

Search

Name

in1

GND

VDD

vin

vout

GND:P__3

VDD:P__2

vin:P__0

vout:P__1

Property Editor

[@instanceName]

VDD

vin

CMOS INVERTER

vout

GND

mouse L: mouseAddPt(t)

M: schCmdOption()

R: schHiMousePopUp()

7(8) Click on text to edit or press ESC to cancel.

Cmd: Text Sel: 0

work@work-eda:~

[Cadence

Virtuoso® Schematic Editor L Editing: Vansh_lib in1 schematic

in1

virtuoso

in1

in1

in1

in1 *

To direct input to this VM, move the mouse pointer inside or press Ctrl+G.

RHEL6_IC617 - VMware Workstation

File Edit View VM Tabs Help

Library

Type here to sea...

My Computer

RHEL6_IC617

Home | RHEL6_IC617

Computer

work's Home

Trash

Terminal

Virtuoso® Symbol Editor L Editing: Vansh_lib in1 symbol *

Launch File Edit View Create Check Options Window Help

cādence

Basic

Navigator

All

in1

Search

Name

in1

GND

VDD

vin

vout

GND:P__3

VDD:P__2

vin:P__0

vout:P__1

Property Editor

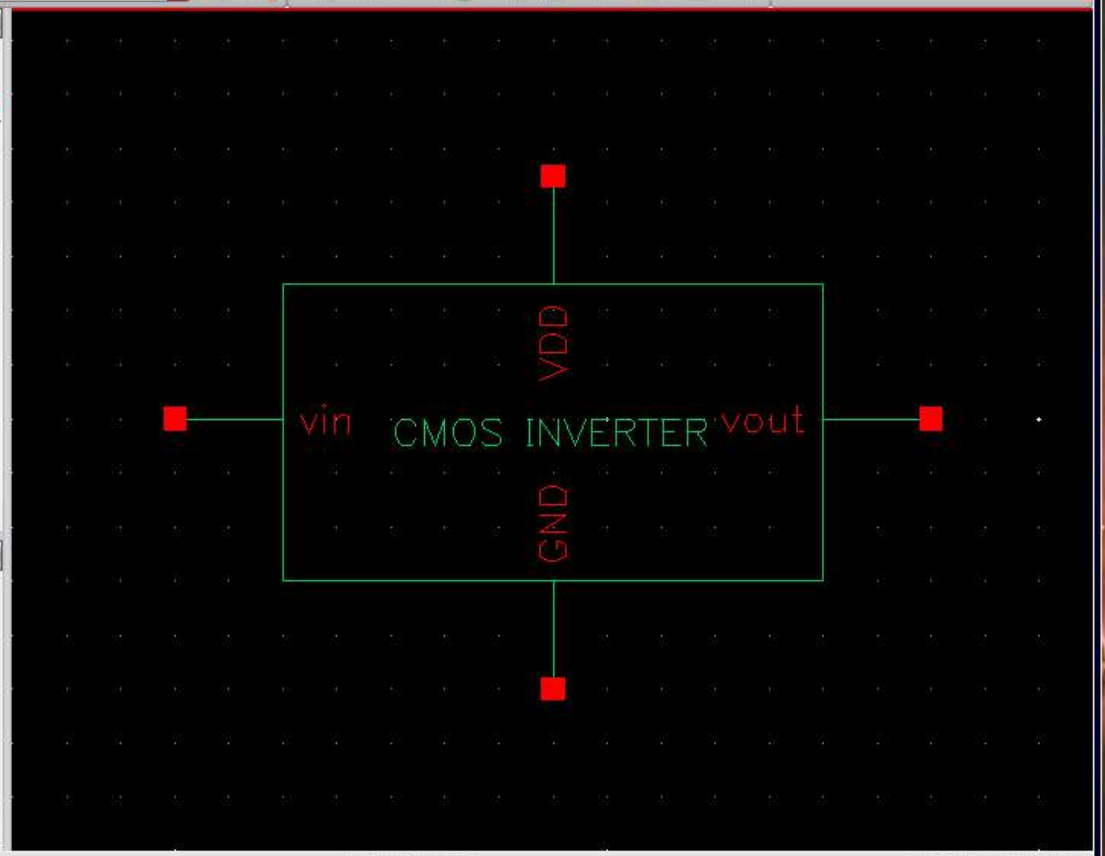

mouse L: mouseAddPt(t) M: schCmdOption() R: schHiMousePopUp()

7(8) Click on text to edit or press ESC to cancel. Cmd: Text Sel: 0

work@work-eda:~ | [Cadence Library Man... | inverter | Virtuoso® Schematic Editor L Editing: Vansh_lib in1 schematic

virtuoso | in1 | in1 | in1 | in1 *

To direct input to this VM, move the mouse pointer inside or press Ctrl+G.

RHEL6_IC617 - VMware Workstation

File Edit View VM Tabs Help

Library

Type here to sea...

My Computer

RHEL6_IC617

Home | RHEL6_IC617

Computer

work's Home

Trash

Terminal

Virtuoso® Schematic Editor L Editing: Vansh_lib in1_test schematic *

Launch File Edit View Create Check Options Window Calibre Help

cādence

Basic

Search

Navigator

All

in1_test

Search

Name

in1_test

I0 (in1)

Property Editor

VDD

vin CMOS INVERTER vout

GND

mouse L: schSingleSelectPt() M: schHiCreateInst() R: schHiMousePopUp()

16(17) Cmd: Sel: 0

work@work-eda:~ | [Cadence Library Mana...

virtuoso | in1_test *

To direct input to this VM, move the mouse pointer inside or press Ctrl+G.

RHEL6_IC617 - VMware Workstation

File Edit View VM Tabs Help

Library

Type here to sea...

My Computer

RHEL6_IC617

Home | RHEL6_IC617

Computer

work's Home

Trash

Terminal

Virtuoso® Schematic Editor L Editing: Vansh_lib in1_test schematic *

Launch File Edit View Create Check Options Window Calibre Help

cādence

Basic

Search

Navigator

All

in1_test

Search

Name

in1_test

I0 (in1)

PIN0 (ipin)

V0 (vpulse)

V1 (vdc)

gnd!

net3

net5

vout

vout:P__0

Property Editor

Schematic Check

4 Warnings

There are check warnings in 'Vansh_lib in1_test schematic'.

Close

V1

vdc=1.8

gnd

VDD

CMOS INVERTER

vout

vout

GND

V0

v1:0

v2=1.8

tr=1n

gnd

gnd

mouse L: mouseAddPt(t)

M: Toggle Draw Mode

R: schHiMousePopUp()

16(17) Point at starting point for the router or snap to diamond using the "s" key.

Processing 95%

Cmd: Wire Sel: 0

work@work-eda:~

[Cadence Library Mana...

Schematic Check

virtuoso

in1_test *

To return to your computer, move the mouse pointer outside or press Ctrl+Alt.

RHEL6_IC617 - VMware Workstation

File Edit View VM Tabs Help

Library

Type here to sea...

My Computer

RHEL6_IC617

Home | RHEL6_IC617

Computer

work's Home

Trash

Terminal

Virtuoso® Schematic Editor L Editing: Vansh_lib in1_test schematic *

Launch File Edit View Create Check Options Window Calibre Help

cadence

Basic

Search

Navigator

All

in1_test

Search

Name

in1_test

I0 (in1)

PIN0 (opin)

V0 (vpulse)

V1 (vdc)

gnd!

net3

net5

vout

vout:P__0

Property Editor

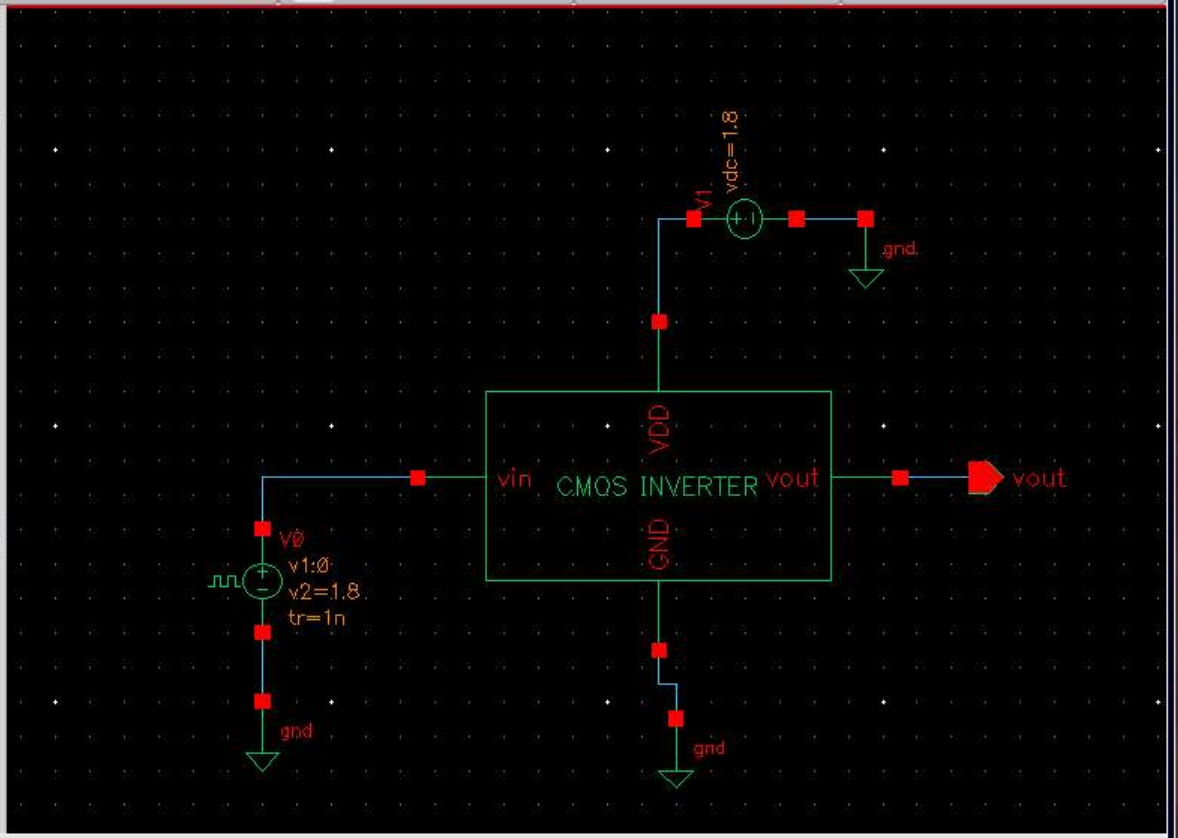

mouse L: schSingleSelectPt() M: schHiCreateWire(0.0) R: schHiMousePopUp()

16(17) Cmd: Sel: 0

work@work-eda:~ | [Cadence Library Mana...

virtuoso | in1_test *

To direct input to this VM, move the mouse pointer inside or press Ctrl+G.

RHEL6_IC617 - VMware Workstation

File Edit View VM Tabs Help

Library

Type here to sea...

My Computer

RHEL6_IC617

Home | RHEL6_IC617

Computer

work's Ho

Trash

Termina

Virtuoso® Analog Design Environment L Editing: Vansh_lib in1_test schematic

Launch File Edit View Create Check Options Window Calibre Help

cādence

ADE L

ADE L (1) - Vansh_lib in1_test schematic

Launch Session Setup Analyses Variables Outputs Simulation Results Tools Calibre Help

cādence

27

Design Variables

Name	Value

Analyses

Type	Enable	Arguments

Outputs

Name/Signal/Expr	Value	Plot	Save	Save Options

Plot after simulation: Auto

Plotting mode: Replace

17(18) Save State ... Status: Ready T=27 C Simulator: spectre

Color cadetB

mouse L: schSingleSelectPt() M: deInstallApp(getCurrentWindow() "analogArtist-Schematic") R: schHiMousePopUp()

16(17) Instance 'I0' Cmd: Sel: 1 Status: Ready T=27 C Simulator: spectre

vdc=1.8

gnd

VDD

GND

NVERTER vout

vout

gnd

work@work-eda:~ | [Cadence Library Mana... | ADE L (1)

virtuoso | in1_test

To direct input to this VM, move the mouse pointer inside or press Ctrl+G.

sign: Ca

sign

e Virtuoso

Inverter De

sign

e Virtuoso

Inverter De

sign

e Virtuoso

Inverter - D

sign

e Virtuoso

ing a Comm

sign

e Virtuoso

mplifier Si

sign

e Virtuoso

Amplifier -

sign

e Virtuoso

From VLS

RHEL6_IC617 - VMware Workstation

File Edit View VM Tabs Help

Library

Type here to sea...

My Computer

RHEL6_IC617

Home | RHEL6_IC617

Computer

work's Ho

Trash

Termina

Virtuoso® Analog Design Environment L Editing: Vansh_lib in1_test schematic

Launch File Edit View Create Check Options Window Calibre Help

cadence

ADE L (1) - Va

Launch Session Setup Analyses Variables Ou

Design Variables

Name	Value

Plot after simulation: Auto

Plotting mode: Replace

17(18) Stimuli ... Status: Ready T=27 C Simulator: spectre

Choosing Analyses -- ADE L (1)

Analysis

tran	dc	ac	noise
xf	sens	dcmatch	acmatch
stb	pz	sp	envlp
pss	pac	pstb	pnoise
pxf	psp	qpss	qpac
qpnoise	qpxf	qpsp	hb
hbac	hbnoise	hbsp	

Transient Analysis

Stop Time 500m

Accuracy Defaults (errpreset)

conservative moderate liberal

Transient Noise

Dynamic Parameter

Enabled

Options...

OK Cancel Defaults Apply Help

vdc = 1.8

gnd

VERTER vout

vout

gnd

Color cadetB

mouse L: schSingleSelectPt() M: sevEditSelectedAnas('sevSession1) R: schHiMousePopUp()

16(17) Cmd: Sel: 1 Status: Ready T=27 C Simulator: spectre

work@work-eda:~ | [Cadence Library Mana... | ADE L (1)

virtuoso | in1_test | Choosing Analyses -- A...

To direct input to this VM, move the mouse pointer inside or press Ctrl+G.

RHEL6_IC617 - VMware Workstation

File Edit View VM Tabs Help

Library

Type here to sea...

My Computer

RHEL6_IC617

Home | RHEL6_IC617

Virtuoso® Analog Design Environment L Editing: Vansh_lib in1_test schematic

Launch File Edit View Create Check Options Window Calibre Help

cādence

Setting Outputs -- ADE L (1)

Selected Output

Name (opt.)

Expression

From Design

Calculator Open Get Expression Close

Will be Plotted/Evaluated

Table Of Outputs

	Name/Signal/Expr	Value	Plot	Save Options
1	vout		yes	allv
2	net3		yes	allv

Add Delete Change Next New Expression

OK Cancel Apply Help

Navigator

All

in1_test

Name

in1_test

I0 (in1)

PIN0 (opin)

V0 (vpulse)

V1 (vdc)

gnd!

net3

net5

vout

vout:P__0

Property Editor

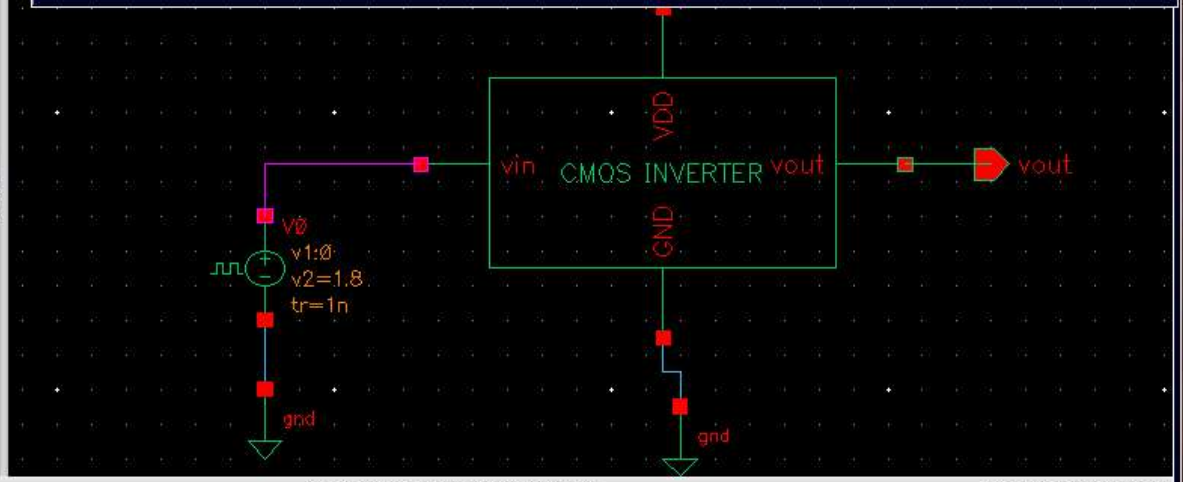

mouse L: schSingleSelectPt() M: sevEditSelectedOuts('sevSession1') R: schHiMousePopUp()

16(17) Cmd: Sel: 0 Status: Selecting outputs to be plotted... T=27 C Simulator: spectre

work@work-eda:~ | [Cadence Library Mana... | ADE L (1)

virtuoso | in1_test | Setting Outputs -- ADE ...

To direct input to this VM, move the mouse pointer inside or press Ctrl+G.

RHEL6_IC617 - VMware Workstation

File Edit View VM Tabs Help

Library

Type here to sea...

My Computer

RHEL6_IC617

Home | RHEL6_IC617

Computer

work's Ho

Trash

Termina

Virtuoso® Analog Design Environment L Editing: Vansh_lib in1_test schematic

Launch File Edit View Create Check Options Window Calibre Help

cādence

ADE L

Search

ADE L (1) - Vansh_lib in1_test schematic

Launch Session Setup Analyses Variables Outputs Simulation Results Tools Calibre Help

cādence

27

Design Variables

Name	Value

> Select on Schematic Outputs to Be Plotted

Analyses

	Type	Enable	Arguments
1	tran	✓	0 500m moderate
2	dc	✓	t 0 1.8 Automatic Start-Stop /V0

Outputs

	Name/Signal/Expr	Value	Plot	Save	Save Options
1	vout		✓		allv
2	net3		✓		allv

Plot after simulation: Auto Plotting mode: Replace

17(18) Setup Outputs ... | Status: Selecting outputs to be plotted... | T=27 C | Simulator: spectre

gnd

vout

gnd

mouse L: schSingleSelectPt() M: sevEditSelectedOuts('sevSession1') R: schHiMousePopUp()

16(17) > modify_plot | Cmd: Sel: 0 Status: Selecting outputs to be plotted... | T=27 C | Simulator: spectre

work@work-eda:~ | [Cadence Library Mana... | ADE L (1)

virtuoso | in1_test

To direct input to this VM, move the mouse pointer inside or press Ctrl+G.

RHEL6_IC617 - VMware Workstation

File Edit View VM Tabs Help

Library

Type here to sea...

My Computer

RHEL6_IC617

Home | RHEL6_IC617

/home/disk/simulation/SIM_IC61/in1_test/spectre/sc

File Edit View Help cādence

```
start = 0 s
outputstart = 0 s
stop = 500 ms
step = 500 us
maxstep = 10 ms
ic = all
useprevic = no
skipdc = no
reltol = 1e-03
abstol(V) = 1 uV
abstol(I) = 1 pA
temp = 27 C
tnom = 27 C
tempeffects = all
errpreset = moderate
method = traponly
lteratio = 3.5
relref = sigglobal
cmin = 0 F
gmin = 1 pS


Output and IC/nodeset summary:
        save  2    (current)
        save  3    (voltage)


Notice from spectre at time = 3.20996 ns during transient analysis `tran'.
   Found trapezoidal ringing on node I0.PM0:int_d.
Notice from spectre at time = 5.39586 ns during transient analysis `tran'.
   Found trapezoidal ringing on node I0.PM0:int_d.
Notice from spectre at time = 8.19793 ns during transient analysis `tran'.
   Found trapezoidal ringing on node I0.PM0:int_d.
Notice from spectre at time = 11 ns during transient analysis `tran'.
   Found trapezoidal ringing on node I0.PM0:int_d.
Notice from spectre at time = 24.0198 ns during transient analysis `tran'.
   Found trapezoidal ringing on node I0.PM0:int_d.
     Further occurrences of this notice will be suppressed.

tran: time = 123 us    (24.6 m%), step = 20.94 ps    (4.19 n%)
```

19 > L170 C68

sign Environment L Editing: Vansh_lib in1_test schematic

ow Calibre Help cādence

Search

n1_test schematic

ults Tools Calibre Help cādence

Enable	Arguments
✓	0 500m moderate
✓	t 0 1.8 Automatic Start-Stop /V0

ame/Signal/Expr	Value	Plot	Save	Save Options
		✓		allv
		✓		allv

mulation: Auto Plotting mode: Replace

1% Status: Simulate... T=27 C Simulator: spectre

gnd. vout gnd

M: sevNetlistAndRun('sevSession1') R: schHiMousePopUp()

Cmd: Sel: 0 Status: Simulate... T=27 C Simulator: spectre

work@work-eda:~ | [Cadence Library Mana... | ADE L (1)

virtuoso | in1_test | /home/disk/simulation/...

To direct input to this VM, move the mouse pointer inside or press Ctrl+G.

Transfer Characteristic (VTC), and running transient analysis. ...more

Explore Electronics

195K views • 4 years ago

RHEL6_IC617 - VMware Workstation

File Edit View VM Tabs Help

Library

Type here to sea...

My Computer

RHEL6_IC617

Home | RHEL6_IC617

/home/disk/simulati

File Edit View Help

```
dc: dc = 1.188 V     (66 %), step = 3
dc: dc = 1.224 V     (68 %), step = 3
dc: dc = 1.26 V      (70 %), step = 3
dc: dc = 1.296 V     (72 %), step = 3
dc: dc = 1.332 V     (74 %), step = 3
dc: dc = 1.368 V     (76 %), step = 3
dc: dc = 1.404 V     (78 %), step = 3
dc: dc = 1.44 V      (80 %), step = 3
dc: dc = 1.476 V     (82 %), step = 3
dc: dc = 1.512 V     (84 %), step = 3
dc: dc = 1.548 V     (86 %), step = 3
dc: dc = 1.584 V     (88 %), step = 3
dc: dc = 1.62 V      (90 %), step = 3
dc: dc = 1.656 V     (92 %), step = 3
dc: dc = 1.692 V     (94 %), step = 3
dc: dc = 1.728 V     (96 %), step = 3
dc: dc = 1.764 V     (98 %), step = 3
dc: dc = 1.8 V      (100 %), step = 3
Total time required for dc analysis `dc':
Time accumulated: CPU = 133.979 ms
Peak resident memory used = 56 Mbyt

modelParameter: writing model param

Opening the PSF file ../psf/modelParar
element: writing instance parameter va

Opening the PSF file ../psf/element.info
outputParameter: writing output param

Opening the PSF file ../psf/outputPara
designParamVals: writing netlist param

Opening the PSFASCII file ../psf/desig
primitives: writing primitives to rawfile.

Opening the PSFASCII file ../psf/primit
subckts: writing subcircuits to rawfile.

Opening the PSFASCII file ../psf/subck
```

23 >

Virtuoso (R) Visualization & Analysis XL

File Edit View Graph Axis Trace Marker Measurements Tools Window Browser Help

cādence

Subwindows: 1 | Data Point | family | Classic

Vansh_lib in1_test schematic

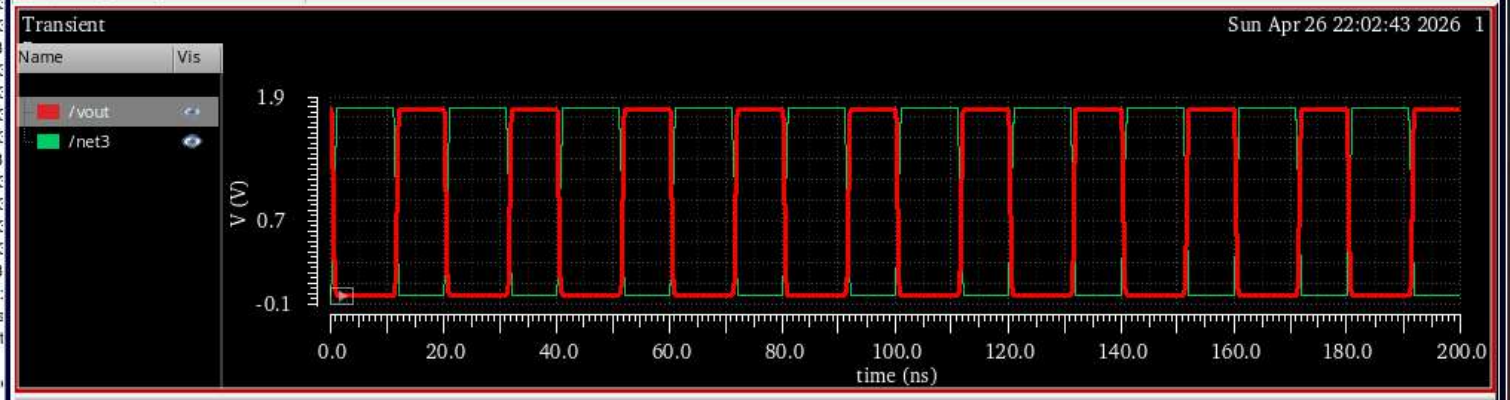

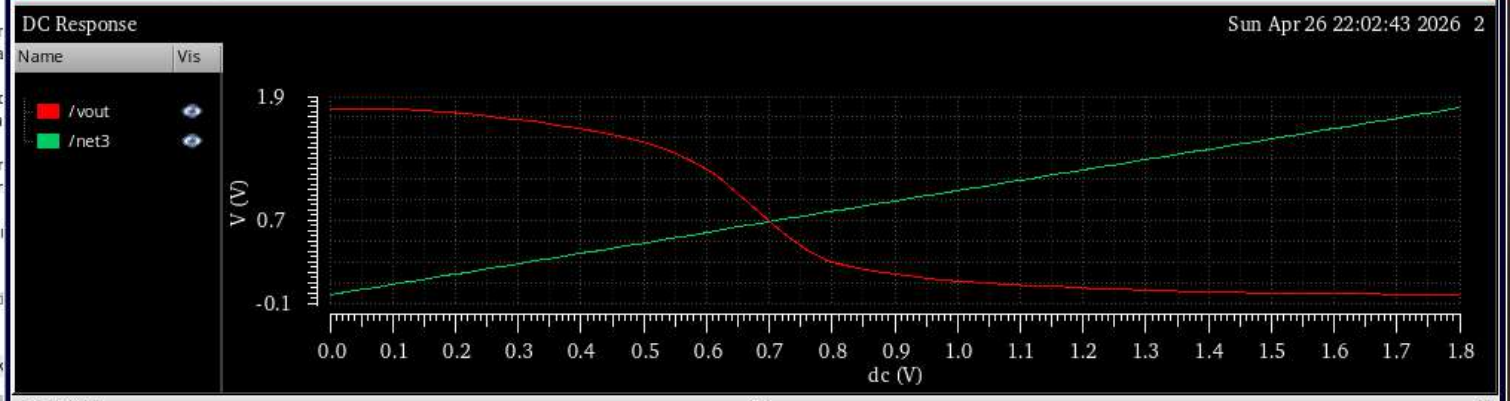

mouse L: M: R:

19(24) Trace: /net3; Context: /home/disk/simulation/SIM_IC61/in1_test/spectre/schematic/psf; Dataset: dc-dc

work@work-eda:~ | [Cadence Library Mana... | ADE L (1) | Virtuoso (R) Visualizati...

virtuoso | in1_test | /home/disk/simulation/...

To direct input to this VM, move the mouse pointer inside or press Ctrl+G.

RHEL6_IC617 - VMware Workstation

File Edit View VM Tabs Help

Library

Type here to sea...

My Computer

RHEL6_IC617

Home | RHEL6_IC617

/home/disk/simulati

File Edit View Help

```
dc: dc = 1.188 V    (66 %), step = 3
dc: dc = 1.224 V    (68 %), step = 3
dc: dc = 1.26 V     (70 %), step = 3
dc: dc = 1.296 V    (72 %), step = 3
dc: dc = 1.332 V    (74 %), step = 3
dc: dc = 1.368 V    (76 %), step = 3
dc: dc = 1.404 V    (78 %), step = 3
dc: dc = 1.44 V     (80 %), step = 3
dc: dc = 1.476 V    (82 %), step = 3
dc: dc = 1.512 V    (84 %), step = 3
dc: dc = 1.548 V    (86 %), step = 3
dc: dc = 1.584 V    (88 %), step = 3
dc: dc = 1.62 V     (90 %), step = 3
dc: dc = 1.656 V    (92 %), step = 3
dc: dc = 1.692 V    (94 %), step = 3
dc: dc = 1.728 V    (96 %), step = 3
dc: dc = 1.764 V    (98 %), step = 3
dc: dc = 1.8 V      (100 %), step = 3
Total time required for dc analysis `dc':
Time accumulated: CPU = 133.979 ms
Peak resident memory used = 56 Mbyt

modelParameter: writing model param

Opening the PSF file ../psf/modelParar
element: writing instance parameter va

Opening the PSF file ../psf/element.info
outputParameter: writing output param

Opening the PSF file ../psf/outputParar
designParamVals: writing netlist param

Opening the PSFASCII file ../psf/desig
primitives: writing primitives to rawfile.

Opening the PSFASCII file ../psf/primiti
subckts: writing subcircuits to rawfile.

Opening the PSFASCII file ../psf/subck
```

23 >

Virtuoso (R) Visualization & Analysis XL

File Edit View Graph Axis Trace Marker Measurements Tools Window Browser Help

cadence

Subwindows: 1 | Data Point | family | Classic

Vansh_lib in1_test schematic

mouse L: M: R:

19(24) Trace: /net3; Context: /home/disk/simulation/SIM_IC61/in1_test/spectre/schematic/psf; Dataset: dc-dc

work@work-eda:~ | [Cadence Library Mana... | ADE L (1) | Virtuoso (R) Visualizati...

virtuoso | in1_test | /home/disk/simulation/...

To direct input to this VM, move the mouse pointer inside or press Ctrl+G.

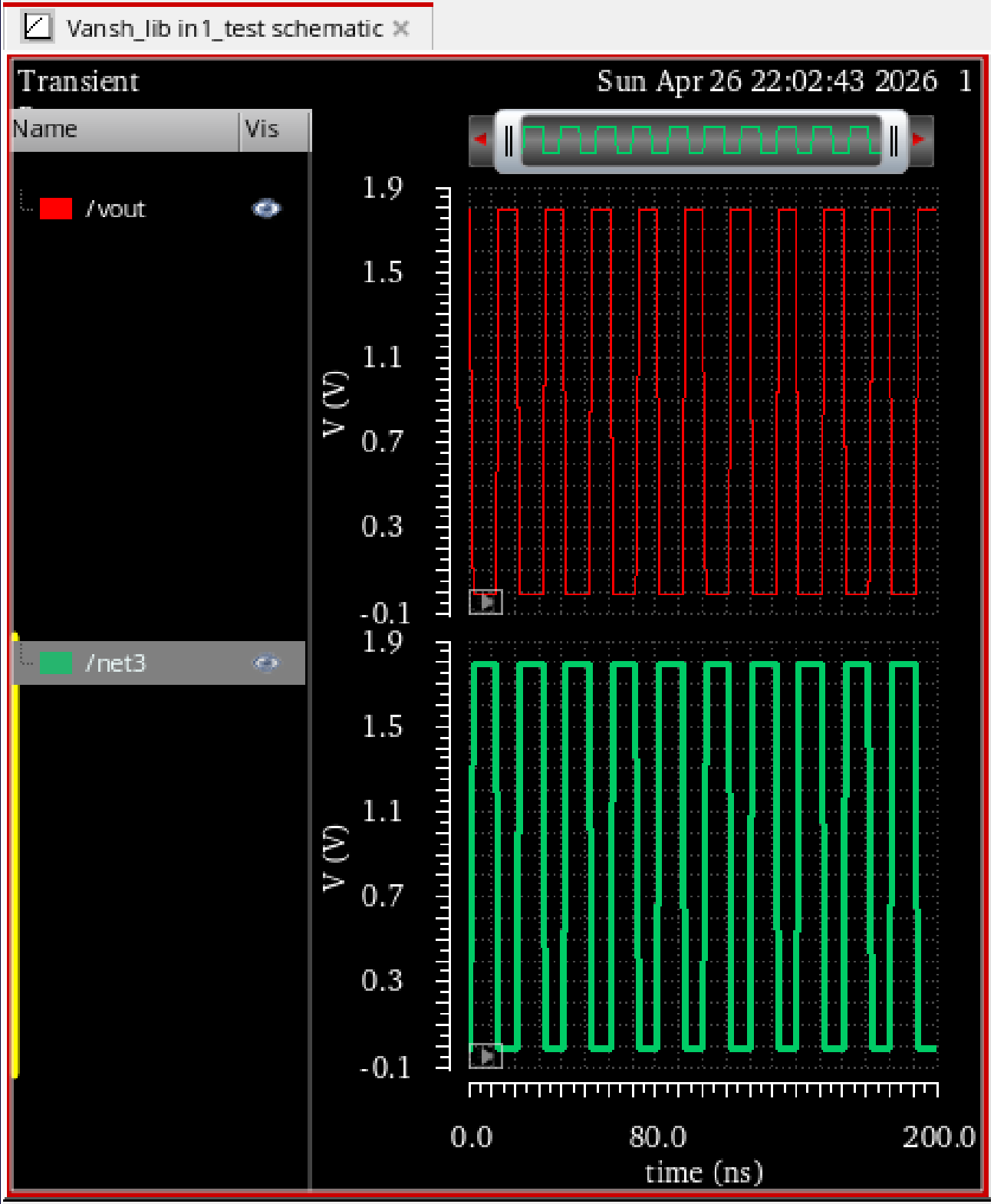
Vansh_lib in1_test schematic
Transient
Sun Apr 26 22:02:43 2026 1
Name
Vis
/vout
/net3
1.9
1.5
1.1
0.7
0.3
-0.1
V (V)
0.0
80.0
200.0
time (ns)

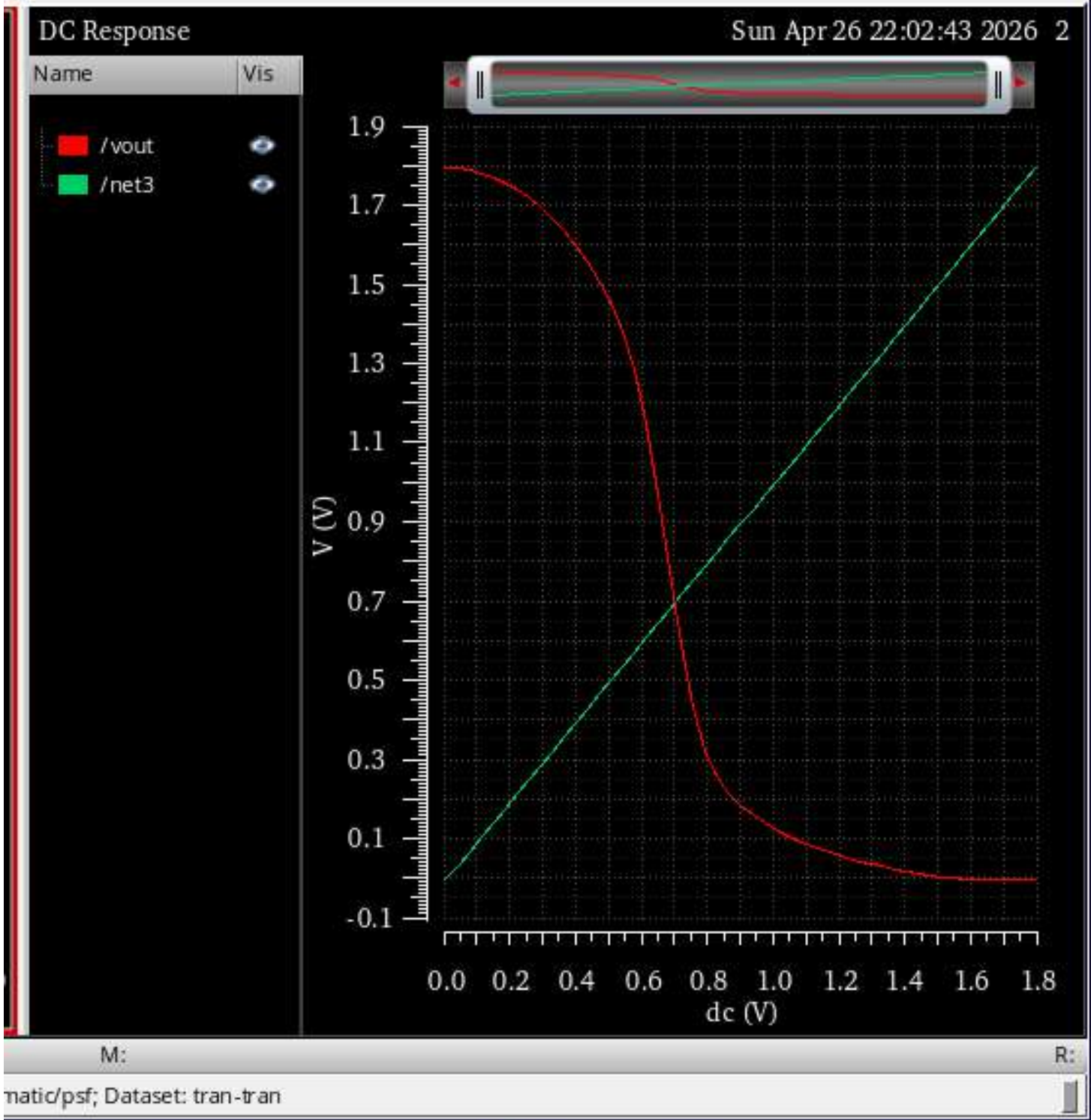
DC Response
Sun Apr 26 22:02:43 2026 2
Name
Vis
/vout
/net3
1.9
1.7
1.5
1.3
1.1
0.9
0.7
0.5
0.3
0.1
-0.1
V (V)
0.0 0.2 0.4 0.6 0.8 1.0 1.2 1.4 1.6 1.8
dc (V)
M:
R:
matic/psf; Dataset: tran-tran

Home | RHEL6_IC617

/home/disk/simulati

File Edit View Help

```
dc: dc = 1.188 V    (66 %), step = 3
dc: dc = 1.224 V    (68 %), step = 3
dc: dc = 1.26 V     (70 %), step = 3
dc: dc = 1.296 V    (72 %), step = 3
dc: dc = 1.332 V    (74 %), step = 3
dc: dc = 1.368 V    (76 %), step = 3
dc: dc = 1.404 V    (78 %), step = 3
dc: dc = 1.44 V     (80 %), step = 3
dc: dc = 1.476 V    (82 %), step = 3
dc: dc = 1.512 V    (84 %), step = 3
dc: dc = 1.548 V    (86 %), step = 3
dc: dc = 1.584 V    (88 %), step = 3
dc: dc = 1.62 V     (90 %), step = 3
dc: dc = 1.656 V    (92 %), step = 3
dc: dc = 1.692 V    (94 %), step = 3
dc: dc = 1.728 V    (96 %), step = 3
dc: dc = 1.764 V    (98 %), step = 3
dc: dc = 1.8 V      (100 %), step = 3
Total time required for dc analysis `dc':
Time accumulated: CPU = 133.979 ms
Peak resident memory used = 56 Mbyt

modelParameter: writing model param

Opening the PSF file ../psf/modelParar
element: writing instance parameter va

Opening the PSF file ../psf/element.info
outputParameter: writing output param

Opening the PSF file ../psf/outputParar
designParamVals: writing netlist param

Opening the PSFASCII file ../psf/desig
primitives: writing primitives to rawfile.

Opening the PSFASCII file ../psf/primiti
subckts: writing subcircuits to rawfile.

Opening the PSFASCII file ../psf/subck
```

23 >

Virtuoso (R) Visualization & Analysis XL

File Edit View Graph Axis Trace Marker Measurements Tools Window Browser Help

cadence

family

Subwindows: 1 Data Point Classic

Vansh_lib in1_test schematic

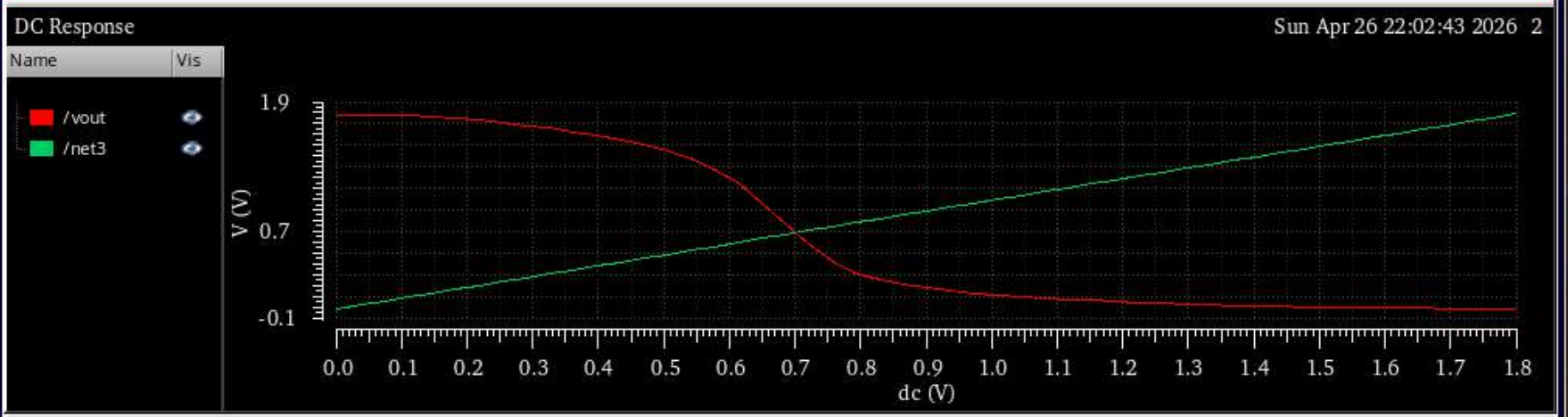

mouse L: M: R:

19(24) Trace: /vout; Context: /home/disk/simulation/SIM_IC61/in1_test/spectre/schematic/psf; Dataset: dc-dc

work@work-eda:~ | [Cadence Library Mana... | ADE L (1) | Virtuoso (R) Visualizati...

virtuoso | in1_test | /home/disk/simulation/...

ve the mouse pointer inside or press Ctrl+G